CASL-U-2013-0211-000

Power uprates
and plant life extension

Consortium for Advanced Simulation of LWRs

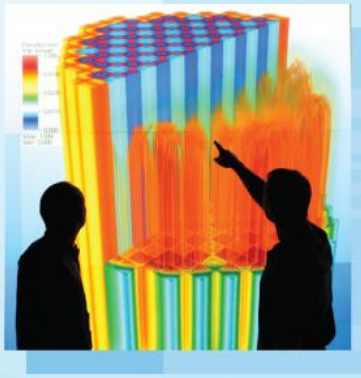

Engineering design
and analysis

L3:THM.CLS.P7.02
MEMS Sensor Measurement of Surface Temperature Response during Subcooled Flow Boiling in a Rectangular Flow Channel

R. Samaroo, M. Kawaji
CUNY Energy Institute

September 30, 2013

Science-enabling
high performance
computing

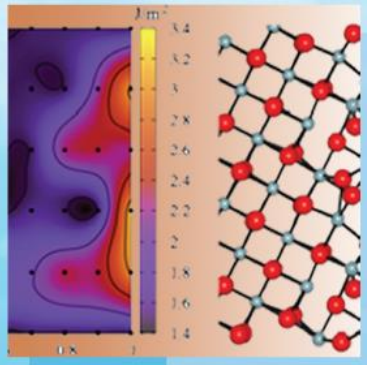

Fundamental science

Plant operational data

U.S. DEPARTMENT OF ENERGY | Nuclear Energy

MEMS Sensor Measurement of Surface Temperature Response during Subcooled Flow Boiling in a Rectangular Flow Channel

R. Samaroo and M. Kawaji

The CUNY Energy Institute, City College of New York, New York, USA

Abstract

Subcooled flow boiling experiments have been conducted using water at atmospheric pressure in a rectangular flow channel. These experiments are conducted to obtain high-resolution data for validation of 3-D Interface Tracking Models (ITMs) and CFD models which can predict subcooled flow boiling phenomena in fuel assemblies of Pressurized Water Reactors. The data needed for model validation include turbulent liquid flow characteristics, vapor bubble nucleation, growth and departure data, and wall temperature response during subcooled flow boiling. In our previous reports, we have presented the results of air bubble injection and subcooled flow boiling experiments conducted in an annular flow channel. In the present work, the temperature response of a MEMS sensor imbedded in the heater surface is being obtained during subcooled flow boiling of water flowing upward through a vertical rectangular test section at atmospheric pressure as shown in Fig. 1.

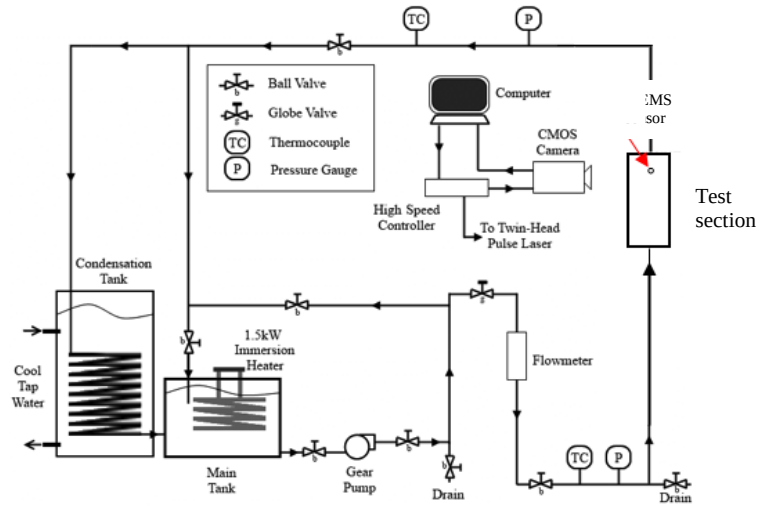

Fig. 1 Sucooled Flow Boiling Loop

The rectangular flow channel is 130.0 mm long, 20.0 mm wide and 4.0 mm high. A special MEMS sensor has been developed as shown in Fig. 2 to measure the response of the heated surface temperature before, during and after the nucleation, growth and departure of a single vapor bubble. The vapor bubble nucleation is triggered by an electric pulse sent to electrodes that causes electrolysis of water and generation of a hydrogen bubble that acts as the vapor bubble nucleus. The MEMS sensor is installed on the heated surface of the rectangular test section at a location 100.0 mm downstream of the channel inlet, after an 80.0 mm long pre-heater section.

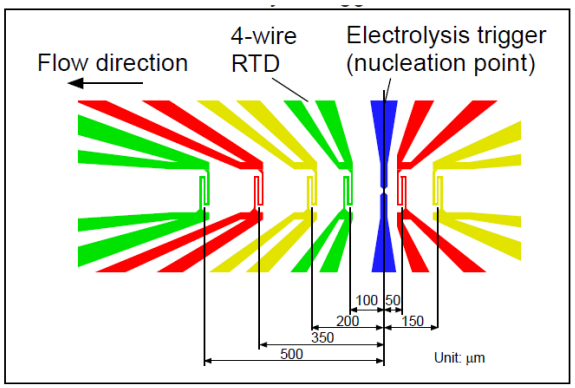

Fig. 2 RTD layout in a MEMS sensor

Sample signals from the MEMS sensor at a heat flux of 83 kW/m^2 and liquid subcooling of 10 ^{o}C are shown in Fig. 3.

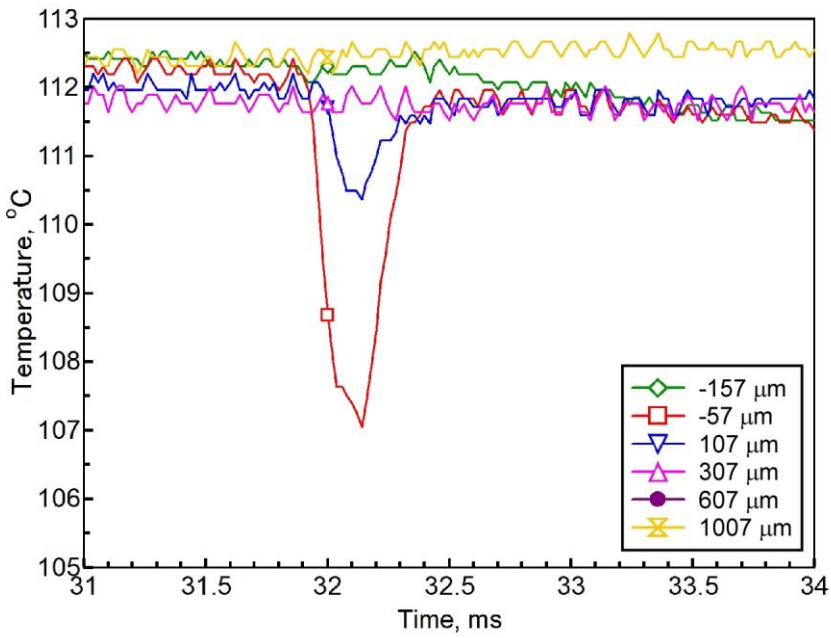

Fig. 3 Output signals from a MEMS sensor

As a bubble is triggered to nucleate at 31.9 ms, the surface temperature drops rapidly and recovers within 400 μs. The magnitude of the temperature drop at 57 μm from the bubble nucleation point is seen to be 5 ^{o}C, and the temperature drop decreases with the distance from the bubble nucleation point as expected. At more than 150 μm, there is no influence of the bubble nucleation seen for this particular bubble nucleation.

The MEMS sensor signals obtained at other times between 20 and 90 ms during the same experimental run as in Fig. 3 are shown in Figs. 4-6.

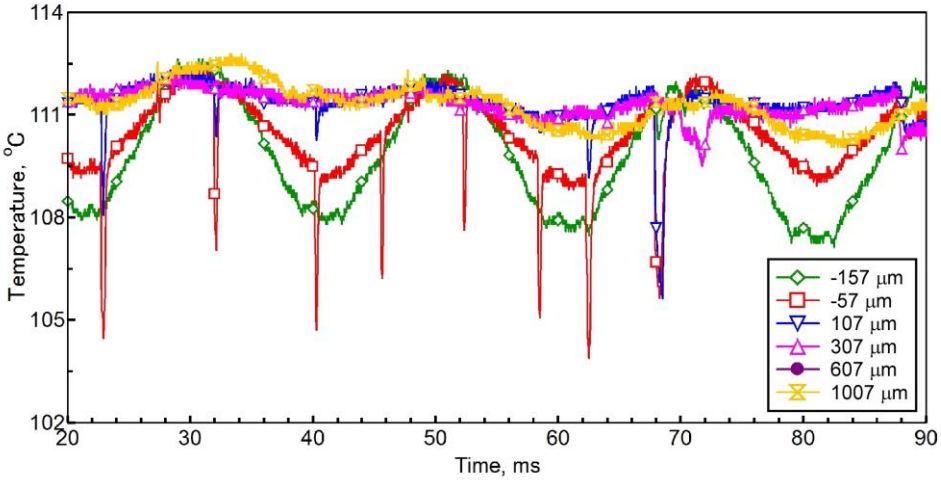

Fig. 4 MEMS sensor signals for time between 20 and 90 ms.

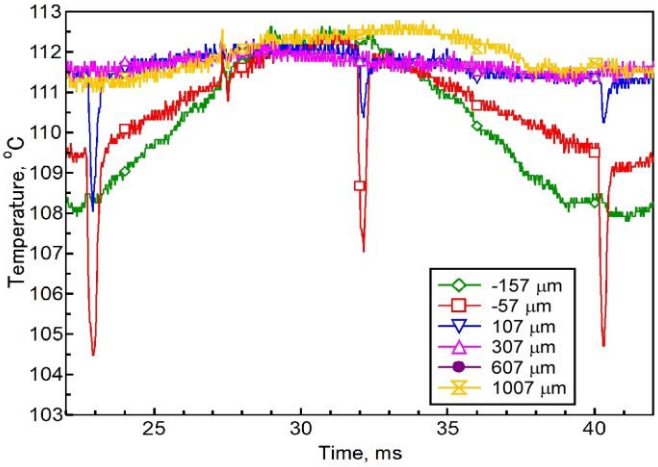

Fig. 5 MEMS sensor signals for time between 20 and 90 ms.

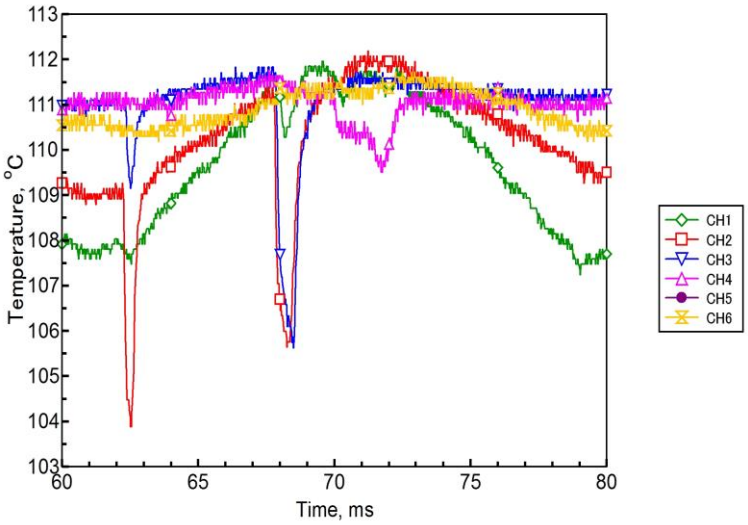

Fig. 6 MEMS sensor signals for time between 60 and 80 ms.

Video images of the sensor surface were also taken at a frame rate of 5,000 fps before and after bubble nucleation at the triggering point as shown in Fig. 7.

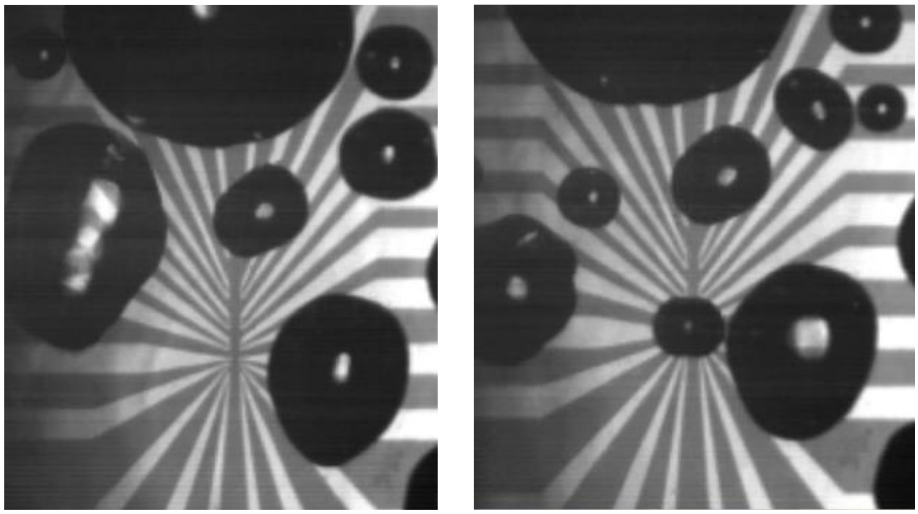

(a) Before nucleation (b) after nucleation

Fig. 7 Video pictures of the vapor bubbles nucleating on the MEMS sensor surface at the trigger point

A digital high-speed video imaging system is also being used to capture the bubble images from the side of the rectangular flow channel, in combination with the liquid velocity profile and turbulence fluctuation measurements using a Particle-Image Tracking Velocimetry system (LaVision FlowMaster 2-D PIV System with 10 μm diameter seed particles).